Measurement of Plasma Parameters of Gliding Arc Driven by the Transverse Magnetic Field

2012 Plasma Sci. Technol. 14 712

(http://iopscience.iop.org/1009-0630/14/8/06)

Measurement of Plasma Parameters of Gliding Arc Driven by the Transverse Magnetic Field*

LI Hui (李辉)[1], XIE Mingfeng (谢铭丰)[2]

[1]Department of Thermal Science and Energy Engineering, University of Science and Technology of China, Hefei 230027, China

[2]National Synchrotron Radiation Laboratory, University of Science and Technology of China, Hefei 230029, China

Abstract The gliding arc can offer high energy efficiency and selectivity for chemical reactions and has been widely applied in material processing, environmental protection and other industrial areas. But the discharge properties, measurement of plasma parameters and related physical processes of the gliding arc discharge still need to further studied. In this study, the gliding arc was driven by the transverse magnetic field to produce the non-equilibrium plasma at high pressure. The parameters of the plasma at our observed point were measured by optical methods. The experimental result shows that the electron temperature is about 0.6 eV and the heavy particle temperature is approximately 2987±250 K.

Keywords: gliding arc, electron temperature, heavy particle temperature

PACS: *52.80.Mg, 52.70.Kz*

DOI: 10.1088/1009-0630/14/8/06

1 Introduction

One of the critical challenges in modern plasma chemistry is to generate the non-equilibrium cold plasma by powerful gas discharge at high-pressure [1~4]. The gliding arc is an important approach to producing non-thermal equilibrium plasma at high pressure [1]. It can offer high energy efficiency and selectivity for chemical reactions and has been used in material processing, methane steam reforming, environmental protection and other industrial applications [5~10].

The gliding arc can be driven by a transverse gas flow or a transverse magnetic field [7,8,10~12]. The properties of the gliding arc are severely influenced by the transverse gas flow driving it, which is discussed in many articles [7,8,10]. But the properties of the gliding arc are only discussed qualitatively or semi-quantitatively mainly due to a lack of plasma parameters, e.g., electron temperature, heavy particle temperature and particle densities. In this paper, the gliding arc driven by the transverse magnetic field is taken into account, and the electron temperature and heavy particle temperature measured by optical methods are also discussed.

2 Experimental device

A schematic diagram of the experimental device is shown in Fig. 1. A transverse magnetic field, perpendicular to the arc current, was produced by a magnetic coil inside which the annular soft-iron core was set. The transverse magnetic field was mainly used to drive the arc upwards. In order to observe the arc inside the annular soft-iron core, a slit whose width (d_2) is about 2 mm was left between the S-poles of the magnet. There was a gap with a width (d_3) of 12 mm in the annular soft-iron core. The magnetic inductance in this gap was about 3194 Gs while the magnetic inductance out of the gap was negligibly small. The direction of the magnetic field (**B**) in this gap is shown in Fig. 2. The gliding arc discharge reactor, which was placed in air, consisted of two electrodes as is shown in Fig. 2. The left electrode was negative, and the right one was positive. The reactor was placed in the gap, and the distance of the smallest gap between the electrodes was about 1.5 mm. The gas injected into the reactor was argon, which was mainly used to dilute the air in the reactor. The flow rate of argon was about 3.3 L/min.

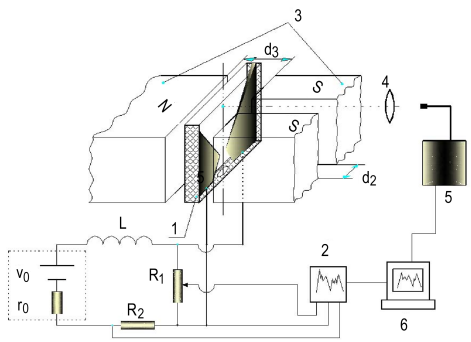

1 Reactor, 2 Oscillograph, 3 Magnet, 4 Lens, 5 Spectrometer, 6 PC

Fig.1 Schematic diagram of the experimental device

*supported by National Natural Science Foundation of China (Nos. 10975136, 11035005) and USTC-NSRL Association Funding of China (No. KY2090130001)

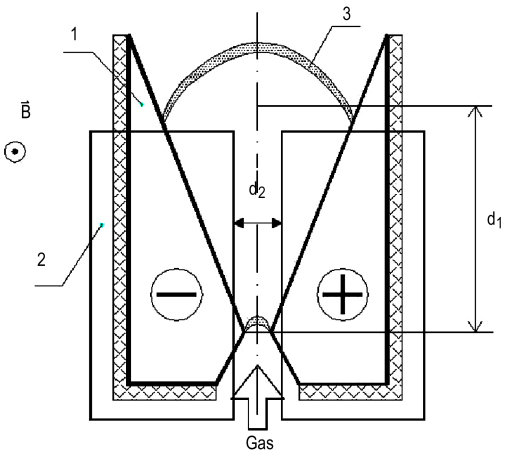

1 Electrodes, 2 S-pole of magnet, 3 Arc
Fig.2 Schematic diagram of the reactor

The power was supplied by a DC high-voltage source with an internal resistor (r_0) of about 1032 Ω, and an open circuit voltage (V_0) of about 6.75 kV. The self-inductance (L) was about 7 H. When the high-voltage supply was switched on, the gliding arc was first struck at the narrowest gap between the electrodes. Then the arc moved up, driven by the magnetic field, and the arc voltage increased. When the high-voltage supply did not satisfy the increasing arc voltage, the gliding arc would be extinguished. And the next discharge cycle would begin.

The signals of the arc voltage and arc current were sampled from R_1(20 MΩ) and R_2(1 Ω) respectively. Then the signals were recorded by a four-channel digital storage oscilloscope (TDS2014, 100 MHz, 1 GS/s), and the electric wave-forms were transferred to PC for data processing. The point where we observed the plasma parameters was the midpoint of the arc column in the axial direction, above the soft-iron core at a distance of about 75 mm (d_1 shown in Fig. 2). The optical signals of the plasma from the observed point were collected by a spectrometer (AvaSpec-2048-USB2-RM, calibrated by Avantes Corporation) with a 10 μm slit entrance width.

3 Results and discussion

3.1 Electron temperature

In our experiments, argon atomic lines were recorded by a spectrometer. Seven atomic lines were chosen for calculating the plasma electron temperature. The parameters of the seven lines, which are presented in Table 1, will be used in the following calculation of the electron temperature.

The electron temperature is calculated by the Boltzmann plot method. According to the Boltzmann formula, we have

$$\ln(\frac{I_n\lambda_n}{g_nA_{nm}}) = -\frac{1}{k_{\mathrm{B}}T_{\mathrm{e}}}E_n + D, \qquad (1)$$

where I_n is the intensity of a line, λ_n is the wavelength of a line, g_n is the statistic weight of state $|n>$, A_{nm} is the transition probability from state $|n>$ to $|m>$, E_n is the energy of state $|n>$, k_{B} is the Boltzmann constant, T_{e} is the electron temperature or temperature of electronic excitation, and D is a constant. The left side of the formula (1) is known, as I_n is the measured intensity for a selected argon atomic line, and λ_n, g_n and A_{nm} can be obtained from Table 1. If the left side of formula (1) is plotted as a function of E_n, this plot should be a straight line with the slope $-1/k_{\mathrm{B}}T_{\mathrm{e}}$. The temperature T_{e} is known if the slope is measured.

According to the measured intensities of the seven selected argon atomic lines, we obtain a straight line by a linear fit as shown in Fig. 3. The electron temperature T_{e} is about 0.6 eV from the slope of the fitting line. But we should note that the temperature obtained from the Boltzmann plot is the excitation temperature T_{excit}. If the plasma is in a thermal equilibrium or partial thermal equilibrium state, the excitation temperature T_{excit} obtained is close to the electron kinetic temperature T_{e}. If the plasma departs from equilibrium, the excitation temperature T_{excit} is commonly less than the electron kinetic temperature T_{e}.

Table 1. Parameters of selected ArI lines; transition is presented in Paschen's notation

λ_n (nm)	Transition	A_{nm} (s^{-1})	E_n (eV)	g_n	Ref.
763.5106	2p6-1s5	2.45e+07	13.172	5	NIST [13]
794.8176	2p4-1s3	1.86e+07	13.283	3	NIST
826.4522	2p2-1s2	1.53e+07	13.328	3	NIST
852.1442	2p4-1s2	1.39e+07	13.283	3	NIST
866.7944	2p7-1s3	2.43e+06	13.153	3	NIST
912.2967	2p10-1s5	1.89e+07	12.907	3	NIST
922.4499	2p6-1s2	5.03e+06	13.172	5	NIST

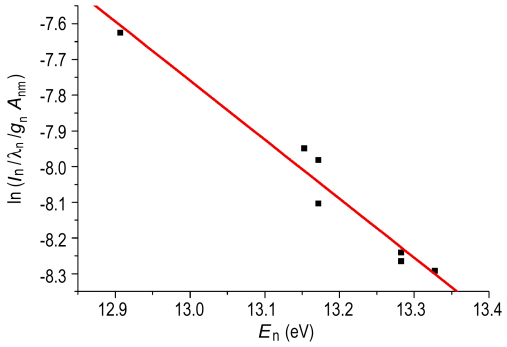

Fig.3 Boltzmann plot for seven selected ArI emission lines

3.2 Heavy particle temperature

The heavy particle temperature (gas temperature) is commonly low and less than the electron temperature in the 'tail' of the gliding arc plasma. In an argon gliding arc discharge plasma, the spectrum of OH radical is easy to be found. The rotational temperature of OH radical is often close to the heavy particle temperature (gas temperature) [14]. The OH band ($A^2\sum, \nu = 0 \rightarrow X^2\prod, \nu' = 0$) was used in our experiment. In order to enhance the intensity of the OH band, argon passed through a vessel filling with water before argon was injected into the reactor. Fig. 4 presents a typical spectrum of the UV band recorded at the observed point (i.e., the 'tail' of the gliding arc plasma) in our experiment. The OH band (i.e., 306∼310 nm) is very strong in our observed spectrum. FWHM (i.e., Full Width at Half Maximum) in the UV band (i.e. 300∼400 nm) of our optical system, measured by using a spectral mercury-argon lamp provided by Avantes Corporation, was about 0.23 nm.

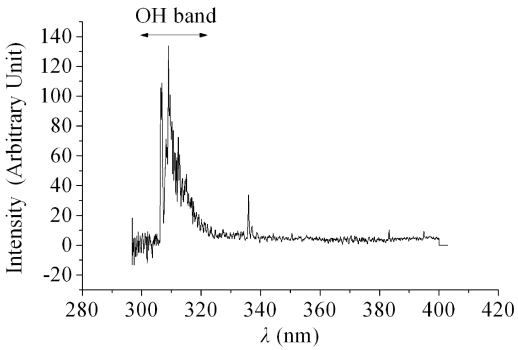

Fig.4 UV spectrum recorded at the observed point in our experiment

The spectrum of the OH band extracted from Fig. 4 is shown in Fig. 5. Fig. 5 shows the presence of two groups of unresolved rotational lines, G_0 and G_1. The amplitudes of G_0 and G_1 are very sensitive against the rotational temperature of OH radicals [15]. We theoretically calculated the values of G_0/G_{ref} and G_1/G_{ref} at different rotational temperatures for FWHM =0.23 nm according to reference data [14]. Fig. 6 presents the amplitudes of G_0/G_{ref} and G_1/G_{ref} as a function of the rotational temperature which varied from 600 K to 8000 K. The values of G_0/G_{ref} and G_1/G_{ref} have a higher sensitivity against the rotational temperature when the temperature is from 600 K to 4000 K. When the temperature is higher than 4000 K, this sensitivity decreases. Fig. 6 also demonstrates that the temperature difference is small for the same values of G_0/G_{ref} and G_1/G_{ref} under the temperature of 4000 K

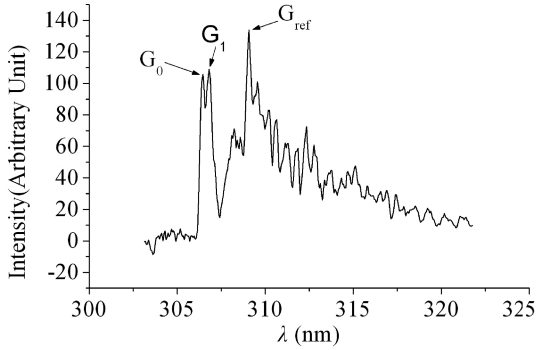

Fig.5 UV spectrum of OH radical at the observed point in our experiment

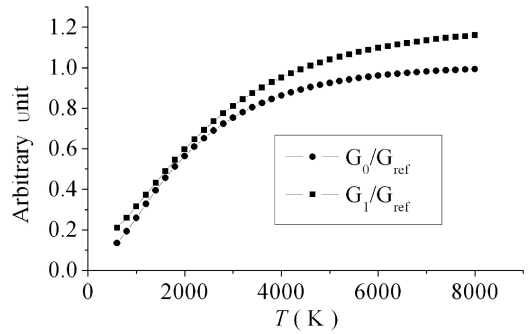

Fig.6 Ratios of the amplitudes of unresolved lines G_0 and G_1 versus G_{ref} as a function of the rotational temperature for FWHM=0.23 nm

According to the experimental results shown in Fig. 5, we subtracted continuum from the OH radical spectrum. The values of G_0/G_{ref} and G_1/G_{ref} obtained were equal to 0.786 and 0.809, respectively. We find the temperature values of 3242 K for G_0/G_{ref} and 2987 K for G_1/G_{ref} through linear interpolations according to Fig. 6. There is a roughly 255 K difference between the temperature values corresponding to G_0/G_{ref} and G_1/G_{ref}. We should pay attention to the fact that the wavelength of the peak G_0 is approximately 306.357 nm. There is a copper atomic line 306.341 nm near the peak G_0 because our electrode material is copper. If FWHM is not high enough, these two lines will not be distinguished. So the amplitude of G_0 is perhaps influenced by the CuI line in our experiment for FWHM=0.23 nm. And the temperature obtained according to the values of G_0/G_{ref} perhaps has a bigger error than that obtained according to the values of G_1/G_{ref}. Therefore, the heavy particle temperature (gas temperature) is approximately determined as 2987 K in our gliding arc discharge conditions.

Because the gliding arc radius is commonly very small at about 1∼2 mm, the spatial resolution of temperature in the radial direction is very difficult to be

achieved. Therefore, the spectra obtained in our experiments were thought as a value of the average intensity of the plasma in a certain space at our observed point. And each spectrum obtained had been averaged 100 times automatically by the spectrometer. Through many analyses of the spectra, the error of the temperature measurements, mainly caused by the gliding arc motion, was about ±250 K.

4 Conclusions

The gliding arc was driven by the transverse magnetic field in our experiments, and the working gas was argon. The spectra of the argon atomic lines and OH-radicals were recorded by the spectrometer at our observed point. We utilize the Boltzmann plot method to determine the electron temperature, which is about 0.6 eV. And the heavy particle temperature (gas temperature) is 2987±250 K obtained by analyzing the spectrum of OH-radicals.

Therefore, we see that the electron temperature is higher than the heavy particle temperature. The gliding arc plasma in our experimental conditions departs from thermal equilibrium. The electron temperature obtained by the Boltzmann plot method is the electronic excitation temperature and is perhaps less than the real kinetic electron temperature. In this paper, the electron temperature is only an approximate value. But it is a very difficult task to measure the real kinetic electron temperature in the non-equilibrium state, and it still needs further studying.

References

1 Fridman A, Nester S, Kennedy L A, et al. 1999, Progress in Energy and Combustion Science, 25: 211
2 Lu X, Xiong Z, Zhao F, et al. 2009, Appl. Phys. Lett., 95: 181501
3 Kim G C, Kim G J, Park S R, et al. 2009, J. Phys. D: Appl. Phys., 42: 032005
4 Wu S Q, Lu X P, Xiong Z L, et al. 2010, IEEE Trans. Plasma Sci., 38: 3404
5 Burlicaa R, Kirkpatrickb M J, Lockeb B R. 2006, Journal of Electrostatics, 64: 35
6 Abdelmalek F, Gharbi S, Benstaali B, et al. 2004, Water Research, 38: 2339
7 Rusu I, Cormier J M. 2003, Chemical Engineering Journal, 91: 23
8 Krawczyk K, Mlotek M. 2001, Applied Catalysis B: Environmental, 30: 233
9 Brethes-Dupouey S, Peyrous R, Held B. 2000, Eur. Phys. J. Applied Physics, 11: 43
10 Janca J, Czernichowski A. 1998, Surface and Coatings Technology, 98: 1112
11 Li H, Ma Q, Li L C, et al. 2004, Plasma Science and Technology, 6: 2593
12 Li H, Wang C B, Tao X P. 2007, Plasma Science and Technology, 9: 596
13 NIST Atomic Spectra Database. http://physics.nist.gov/PhysRefData/ASD/lines-form.html
14 Dieke G H, Crosswhite H M. 1961, J. Quant. Spectrosc. Radiat. Transfer, 2: 97
15 Charles D I. 2000, J. Phys. D: Appl. Phys., 33: 1697

(Manuscript received 9 September 2011)
(Manuscript accepted 20 November 2011)
E-mail address of LI Hui: huilli@ustc.edu.cn